DMwriter™ MX DAPRA®

The affordable alternative to secondary, direct part marking.

- Mark parts directly in CNC milling equipment
- No electric or pneumatic input required
- Use standard CNC engraving software
- Mark alphanumeric text, symbols and logos
- Use existing machine tool fixturing

Contact Dapra today to learn how the new DMwriter™ MX can streamline your marking process and save you time and money!

DAPRA® MARKING SYSTEMS

www.dapramarking.com **Email: sales@dapramarking.com**

66 Granby Street, Bloomfield, CT 06002 Tel: 800-442-6275 In CT: 860-286-8728 Fax: 860-726-9555

DMwriter MX DAPRA®

Standard Installation

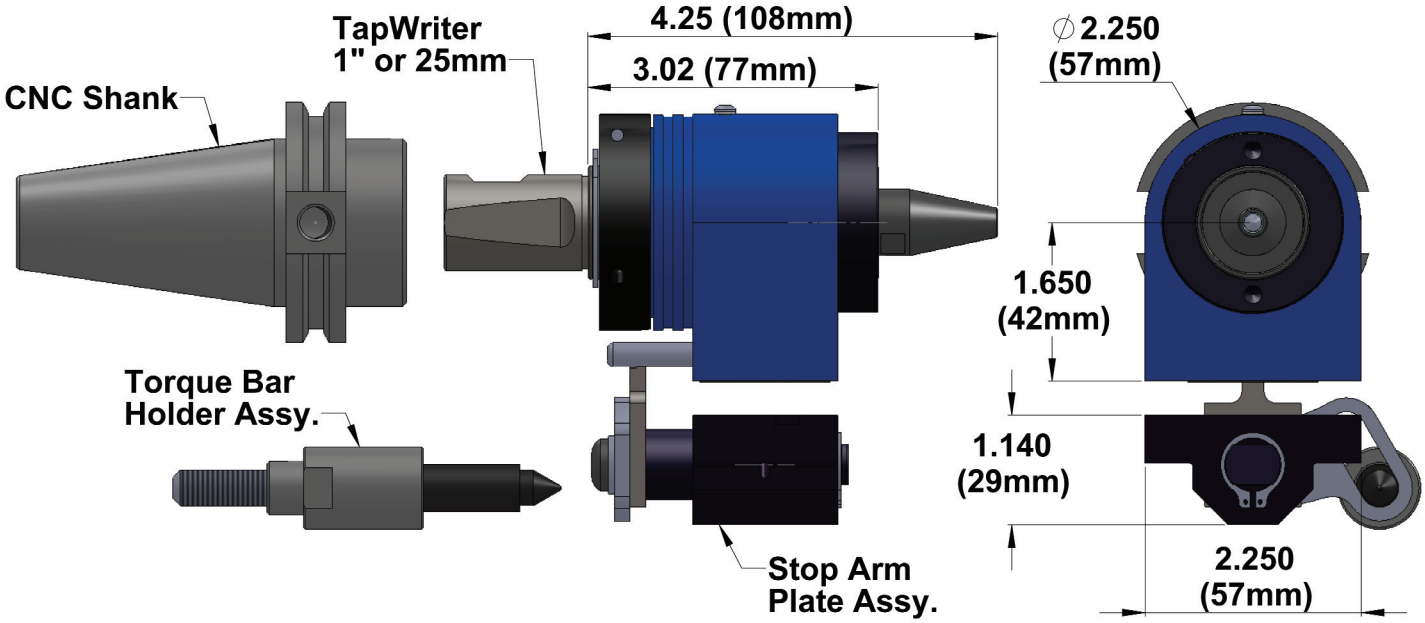

Alternative Installation

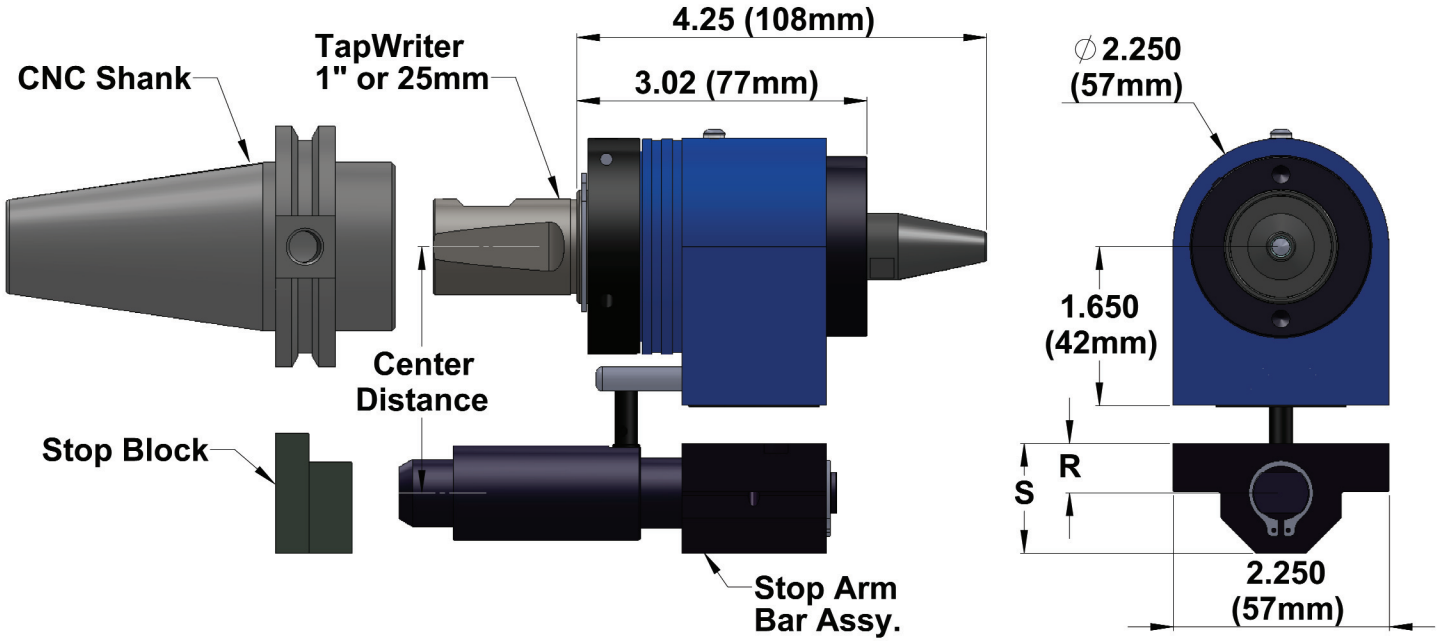

DAPRA®
MARKING SYSTEMS

www.dapramarking.com Email: sales@dapramarking.com

66 Granby Street, Bloomfield, CT 06002 Tel: 800-442-6275 In CT: 860-286-8728 Fax: 860-726-9555

200911